#1 SD-EX TYPE

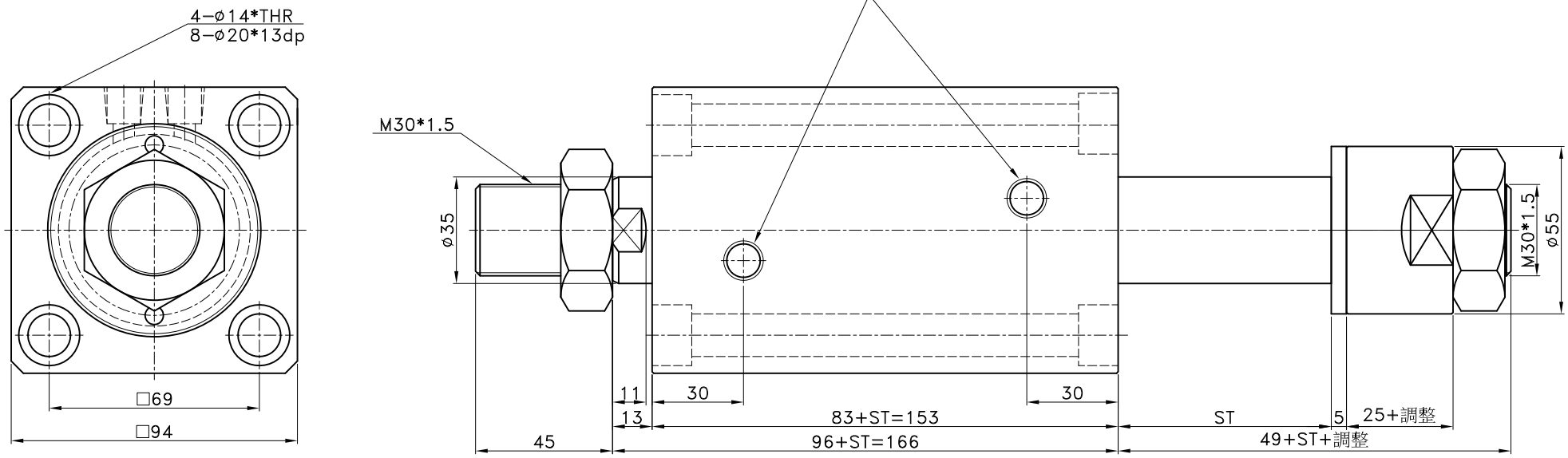

#2 SD-IN TYPE

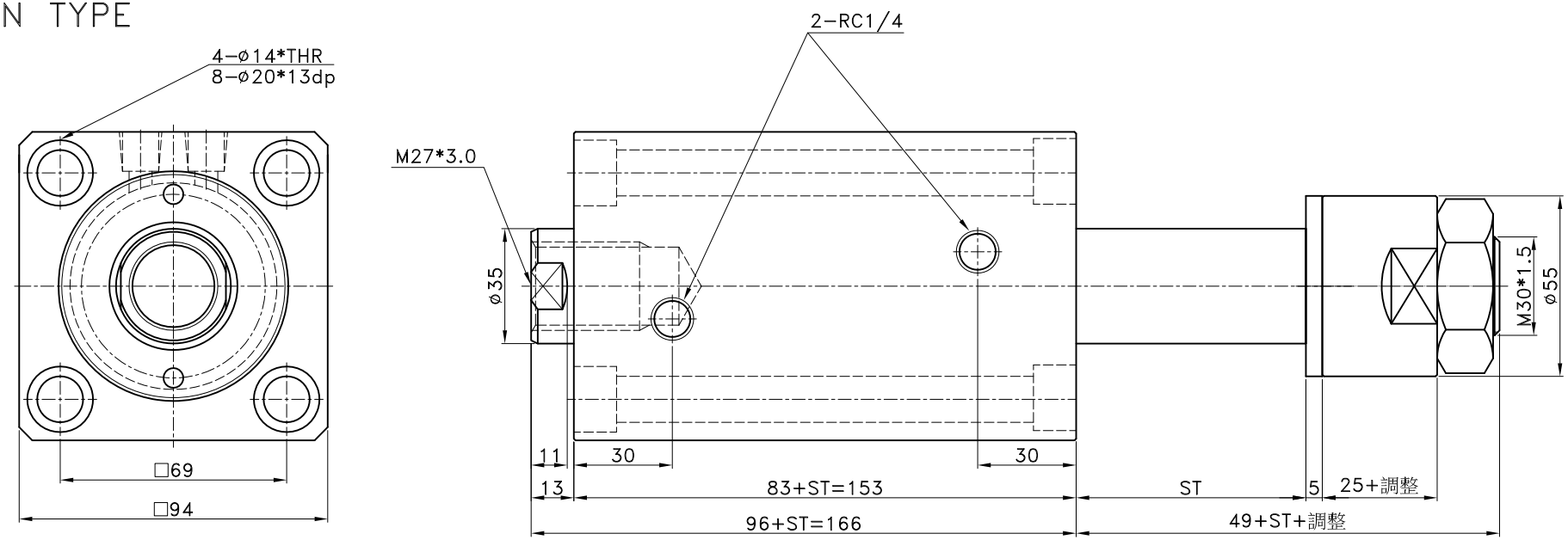

JUFAN CORP.	COMPACT MAGNATIC OIL CLY. (INCLUDE INDUCTION TYPE)		2005/08/12
SCAL=1/1	BORE= 32	STROKE= 70	FILE: CXHC.D063
NOTE:THIS HARDCOPY IS 1/1.5 SCALE DUE TO THE A4SIZE PRINT.			